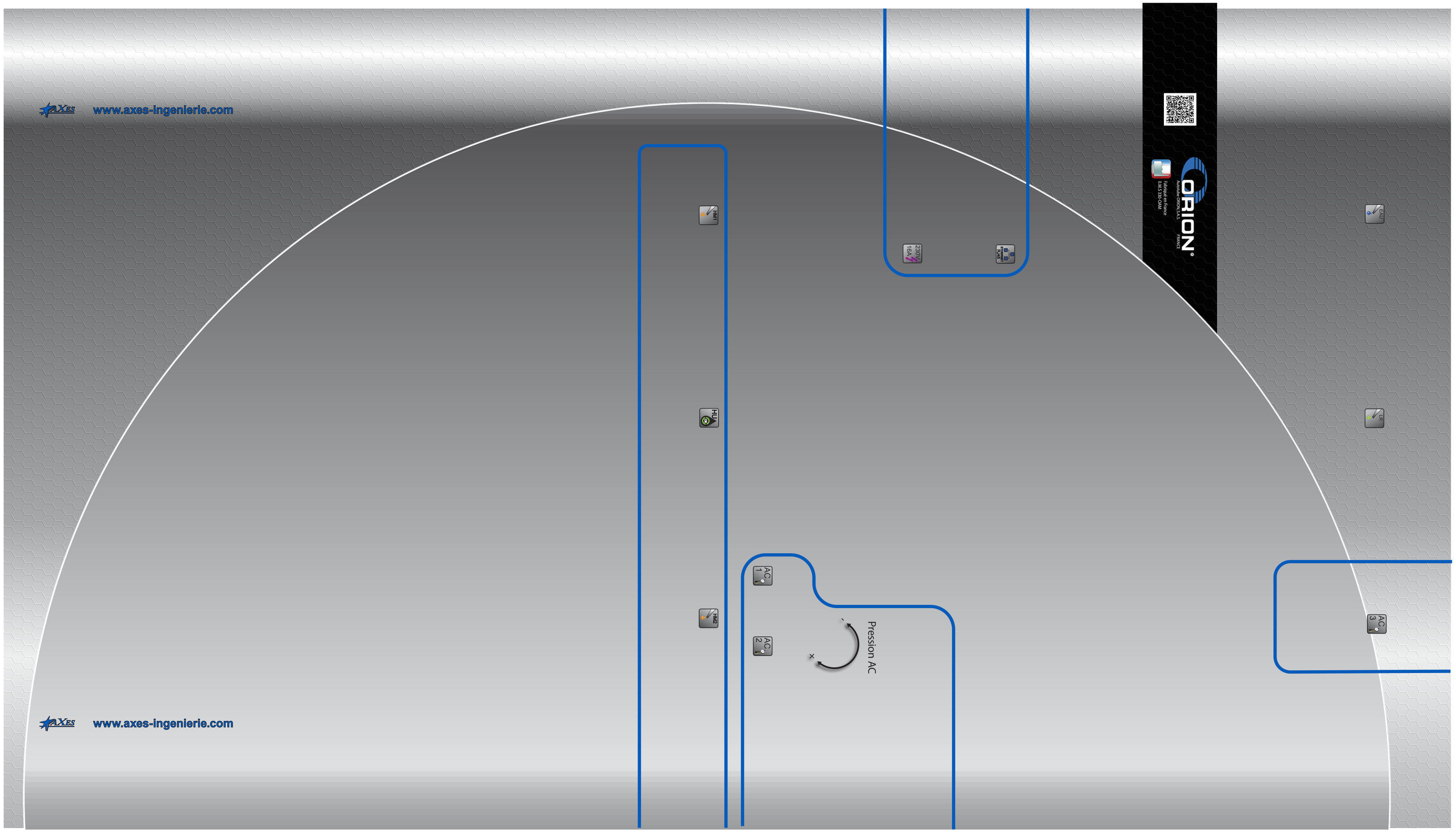
www.axes-ingenierie.com
ORION
PRINTZ
Assemblage ORION S.A.S
Distingué en France
SIRET 538 C.OAM
HMI
HMI
230V
16A
AC 1
AC 2
Pression AC
AC 3
www.axes-ingenierie.com